MAYTONI
DECORATIVE LIGHTING

Instruction

TR028-3-GU10-B

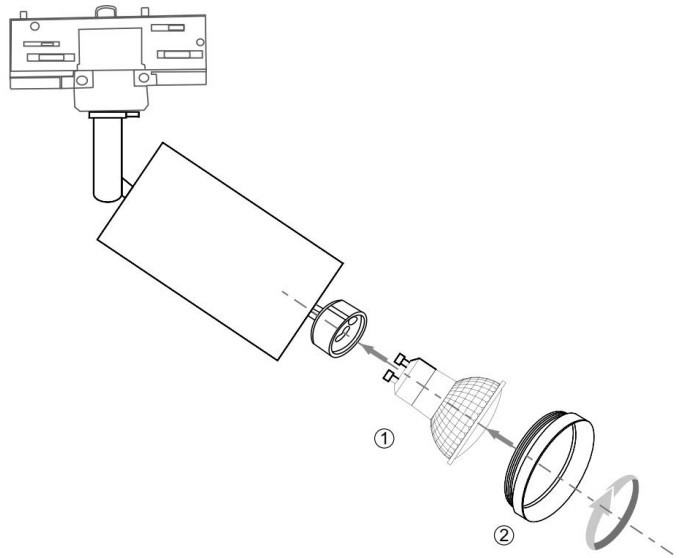

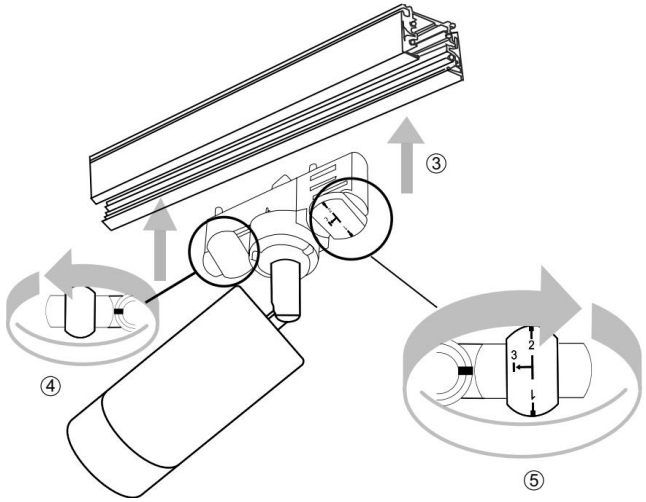

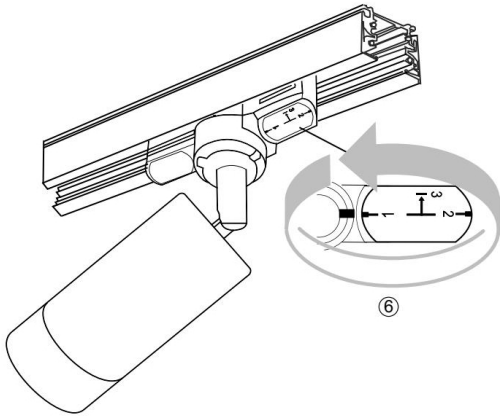

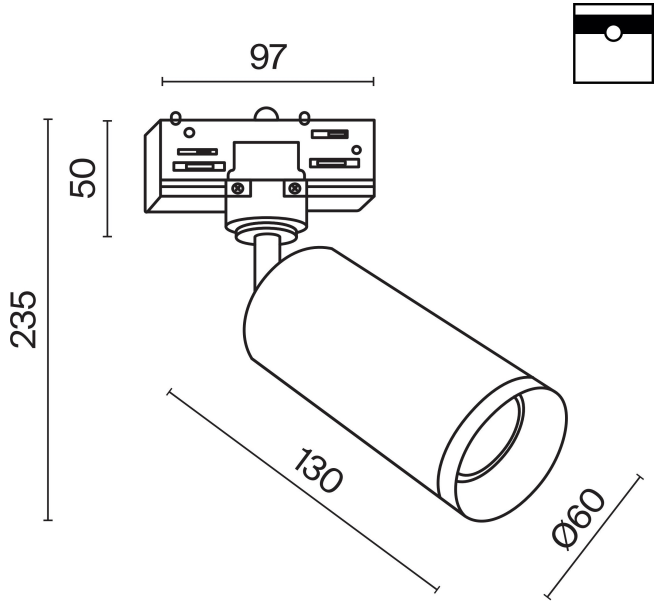

1xGU10 10W

Model: TR028-3-GU10-B

Collection: Three phase track

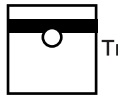

Focus

Track light